DWPM4

Draw Wire Potentiometer
Metal Case

RESISTIVE Ω | ANALOG 0-10 V 4-20 mA

- Measurement length 10000 - 20000 mm
- 5 kOhm / 10 kOhm resistive type or
  0-5V, 0-10V, 0-20 mA, 4-20 mA internal electronic circuit

Technical Specifications

Measurement stroke	10000 - 20000 mm
Type of measurement	Resistive (voltage divider)
Linearity	0,5 %
Output type	Resistive output : 5 kOhm / 10 kOhm Analog output : 0-5 V, 0-10 V , 0-20 mA yada 4-20 mA
Power supply	24 VDC max. 15 - 30 V (voltage / current output)
Electrical connections	2.5 m cable (standard)
Displacement speed	2 m/s
Case material	Aluminium
Weight	< 5000 gr
Protection level	IP 65
Operating temperature	-20°C ... +80°C
Storage temperature	-30°C ... +90°C

Mechanical Specifications

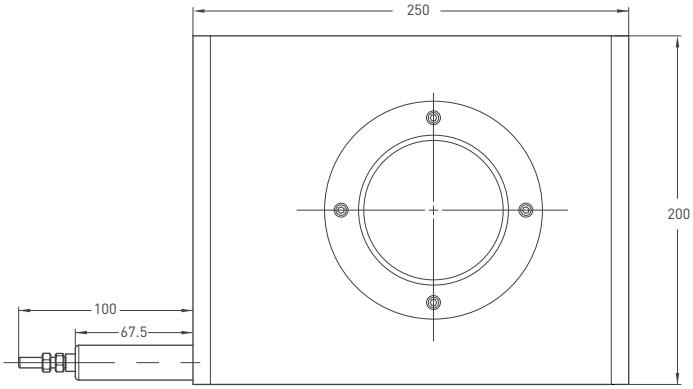

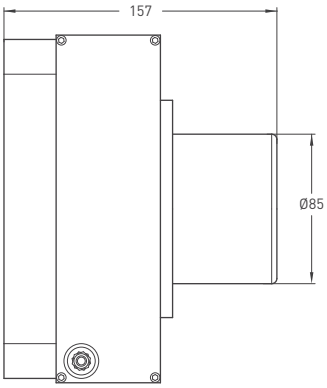

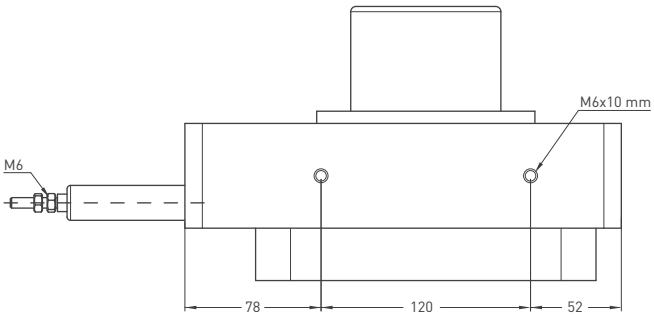

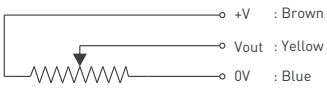

POTENTIOMETRIC OUTPUT

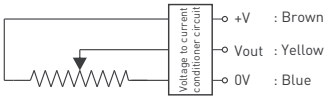

0-10V VOLTAGE OUTPUT

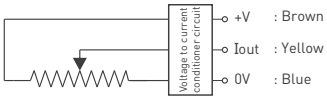

0-20mA / 4-20mA CURRENT OUTPUT

Ordering Procedure

Model	Case type	Measurement stroke	Linearity	Output	Connector / Cable	Cable output
DWPM	4	10000	A	5K	2M5	R
DWPM	4	10000 - 20000 mm	A: ± 0,5%	5K : 5KΩ 10K : 10KΩ V5 : 0-5V V10 : 0-10V I20 : 0-20mA I40 : 4-20mA	2M5: 2.5 meter cable 5M : 5 meter cable 8M : 8 meter cable 10M : 10 meter cable	R: Radial A: Axial (optional)

Please note: The specifications and information in this datasheet may not cover all special demands arising from specific applications. Therefore, they do not constitute a comprehensive description of the product properties. OPKON accepts no responsibility for damages resulting from the improper application of our products. The user is responsible for ensuring that the products used are suitable for their own application.