DWP

Draw Wire Potentiometer
Plastic Case

RESISTIVE Ω | ANALOG 0-10 V 4-20 mA

- Measuring length 1800 mm
- 5 kOhm / 10 kOhm resistive type or
  0-5V, 0-10V, 0-20 mA, 4-20 mA internal electronic circuit

Technical Specifications

Measurement stroke	1800 mm
Type of measurement	Resistive (voltage divider)
Linearity	%0.5, %0.1 or %0.05
Output type	Resistive output : 5 kOhm / 10 kOhm Analog output : 0 - 5 V, 0 - 10 V , 0 - 20 mA, 4 - 20 mA
Power supply	24 VDC max. 15 - 30 V (voltage / current output)
Electrical connections	2.5 m cable (standard)
Displacement speed	2 m/s
Case material	Aluminium / Steel / ABS Plastic
Weight	< 550 gr.
Protection level	IP 54
Operating temperature	-20°C ... +80°C
Storage temperature	-30°C ... +90°C

Mechanical Specifications

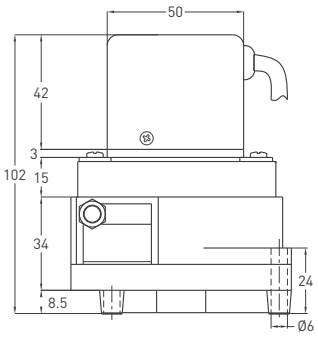

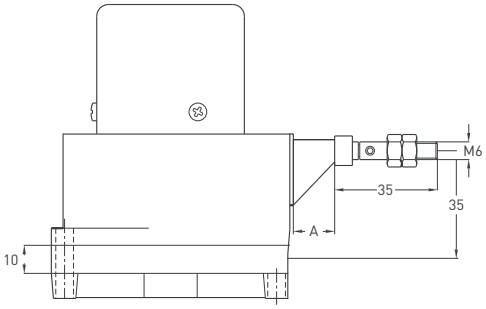

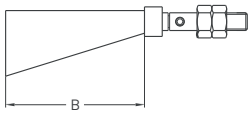

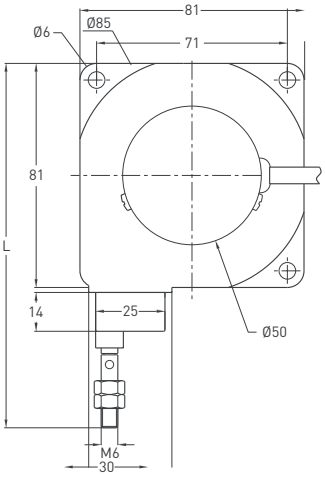

		Measurement stroke	L
A	14 mm	1800 mm	132

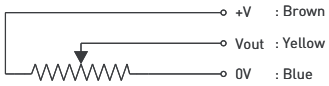

POTENTIOMETRIC OUTPUT

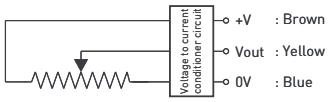

0-10V VOLTAGE OUTPUT

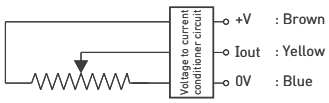

0-20mA / 4-20mA CURRENT OUTPUT

Ordering Procedure

Model	Case type	Measurement stroke	Linearity	Output	Connector/cable	Cable output
DWP	1	1800	C	5K	2M5	R
DWP	1	1800 mm	A: 0,5% C: 0,1% D: 0,05%	5K : 5KΩ 10K : 10KΩ V5 : 0-5V V10 : 0-10V I20 : 0-20mA I4 : 4-20mA	2M5: 2.5 meter cable 5M : 5 meter cable 8M : 8 meter cable 10M : 10 meter cable	R: Radial A: Axial (optional)

Above given technical data are only for information purpose. OPKON has right to change product specifications without notice.