ALCYON
ÉLECTRONIQUE
commercial@alcyonelectronique.fr

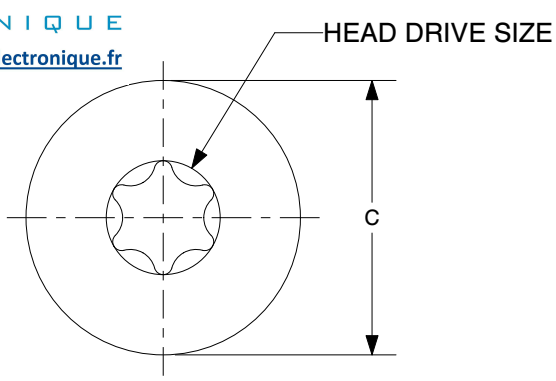

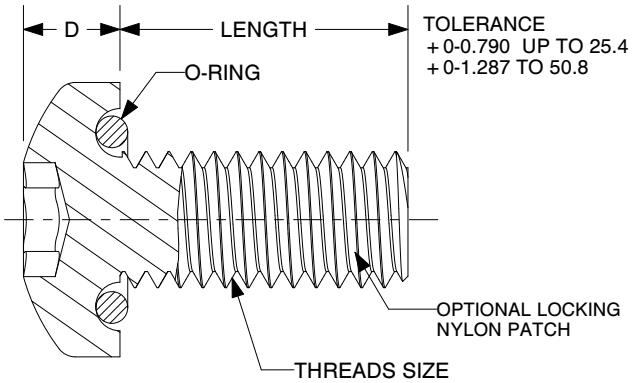

THREAD SIZE	C		D max	Head Driver Size	RECOM. CLEAR. HOLE		DEPTH	
	min.	max.			min.	max.	min.	max.
M2x0.4	4.10	4.45	1.65	#T6	2.31	2.41	0.8	1.2
M2.5x0.45	5.20	6.10	2.30	#T8	2.67	2.84	0.9	1.3
M3x0.5	6.50	7.10	2.70	#T8	3.55	3.65	1.0	1.5
M4x0.7	8.13	8.80	3.05	#T20	4.39	4.54	1.4	2.1
M5x0.8	9.40	10.50	4.00	#T25	5.15	5.30	1.6	2.4
M6x1.0	12.20	13.20	4.60	#T27	6.73	6.83	2.0	3.0

TYPICAL CLEARANCE HOLE DETAIL

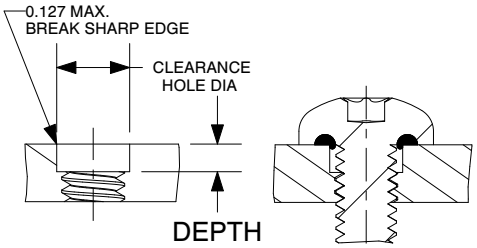

STANDARD SPECIFICATIONS & COMMON OPTIONS (HOW TO ORDER)
STD. SCREW MATERIAL: TYPE 18/8 STAINLESS STEEL PER DFARS (OTHER MATERIALS AVAILABLE)
STD. SCREW FINISH: NATURAL (PASSIVATED PER AMS2700 UNLESS OTHERWISE SPECIFIED)
STD. O-RING MATERIAL: SILICONE RUBBER (SEE TABLE FOR O-RING OPTIONS)
REACH, RoHS, CMRT, PROP 65 COMPLIANT

SAMPLE CATALOG NO.		LBM3X10MM-2701-BLKOX
SCREW TYPE	LB	PAN HEAD WITH 6-LOBE DRIVE STYLE
THREAD	M3	ENTER BASIC THREAD SIZE
	X	
LENGTH	10MM	ENTER LENGTH
O-RING SUFFIX	-2701	ENTER FROM TABLE
OPTIONS	-BLKOX	ENTER FROM TABLE

AVAILABLE O-RING MATERIALS

Compound Suffix	Material	Service Temp.
-2701	Silicone Rubber	-150° F to 500° F -101° C to 260° C
-2615	FluoroSilicone Rubber	-78° F to 450° F -61° C to 232° C
-5701	Viton A	-20° F to 400° F -29° C to 204° C
-4601	Buna N (NBR)	-65° F to 250° F -54° C to 121° C
-3701	Neoprene (EPR)	-65° F to 300° F -54° C to 149° C
-7601	Ethylene Propylene (EPDM)	-65° F to 300° F -54° C to 149° C

COMMON OPTIONS

SUFFIX	DESCRIPTION
-BLKOX	BLACK OXIDE PER MIL-C-13924, CLASS 4
-NY	LOCKING NYLON PELLET
-LY	LOCKING NYLON STRIP
-TP	LOCKING NYLON STD. PATCH
-HTP	HIGH TEMP. LOCKING NYLON PATCH

REV.	DESCRIPTION		DATE
J	UPDATED TOL. FROM ISO 7045 TO ISO 14583 & FORMATTING	DWN: DAN LAW CHKD: FJK/LP	10.29.19
I	UPDATED NOTES FROM B18.6.3 TO ISO 7045	DWN: DAN LAW CHKD: FK	08.20.19
H	UPDATED TO NEW FORMATING, NO DIMENSIONAL CHANGES.	DWN: DAN LAW CHKD: FK 06/14/19	10.25.18
G	ADDED INSTANCE M5x0.8.	DWN: DAN LAW CHKD: KF/FK/SM 01.08.18	11.20.17

TOLERANCES
UNLESS OTHERWISE NOTED
.X ±0.1 .XXX ±0.005
.XX ±0.01 ∠ ±1.0°
RUBBER: RMA "A3" COMMERCIAL
ALL DIMENSIONS ARE IN MILLIMETERS
TOLERANCE: PER ISO 14583

MATERIAL & FINISH:
SEE SPECIFICATIONS & COMMON OPTIONS

TITLE:
SEELSKREW®, PAN HEAD w/ 6 LOBE DRIVE

APM HEXSEAL
Sealing Specialists

ENG.	S. GOK	09.19.08
DWN.	S. GOK	09.19.08
CHKD.	J. CELLA	09.19.08

SCALE	DWG. NO.
NTS	LBM-0000-00-00

THIS DRAWING IS THE PROPERTY OF APM HEXSEAL CORPORATION AND INCLUDES PROPRIETARY INFORMATION.
THIS DRAWING IS NOT TO BE COPIED OR USED WITHOUT THE WRITTEN APPROVAL OF AN OFFICER OF APM HEXSEAL CORPORATION.