ALCYON
ÉLECTRONIQUE
commercial@alcyonelectronique.fr

BL70 EB Series 85W to 110W BLDC Motors

SPECIFICATIONS

Model	4322 016 +	70021	70022	70023	70024	70025	70026
Housing Length, L	mm	95		109		123	
Nominal Voltage	V	24	42	24	42	24	42
Voltage Range	V	14 - 30	27 - 48	14 - 30	27 - 48	14 - 30	27 - 48
Max. Output Power[1]	W	85		95		110	
Nominal Torque	mNm (oz-in)	215 (30.5)		285 (40.4)		355 (50.3)	
Max. Continuous Torque[1]	mNm (oz-in)	300 (42.5)	400 (56.7)	340 (48.2)	480 (68)	380 (53.8)	480 (68)
Nominal Speed	RPM	3800		3200		3000	
No-Load Speed	RPM	4760	5000	3920	4011	3580	3890
Nominal Current	A	4.3	2.7	5	3.2	5.5	3.6
Max. Continuous Current[1]	A	5.8	4.3	5.8	4.3	5.8	4.3
No-Load Current	A	0.75	0.46	0.68	0.4	0.69	0.46
Rotor Inertia	kgm^2 ($oz\text{-}in\text{-}s^2$)	30E-6 (4.25E-3)		40E-6 (5.67E-3)		50E-6 (7.08E-3)	
Mechanical Time Constant	ms	3					
Thermal Resistance Housing-Ambient	°C/W	2.7		2.4		2.2	
Weight	kg (oz)	1.0 (35.3)		1.3 (45.9)		1.6 (46.4)	
Protection	-	IP54					
Gearbox (option)	-	P59A, S83A					

Notes: Values valid for nominal voltage and T_{amb} = 22 ºC

PERFORMANCE

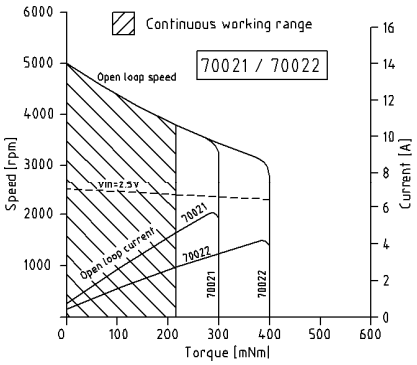

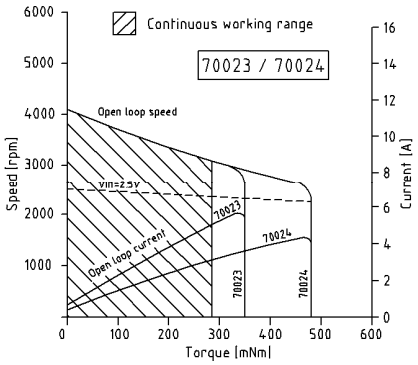

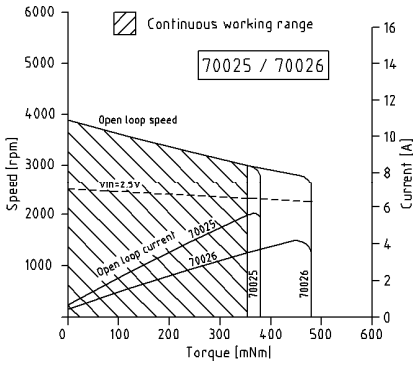

DIMENSIONS

Pin	Lead	Fct
1	Wht	Vin
2	Grn	Freq Out
3	Brn	CW/CCW
4	Yel	Shield

Shaft max. radial load 20 mm from front mount: 80

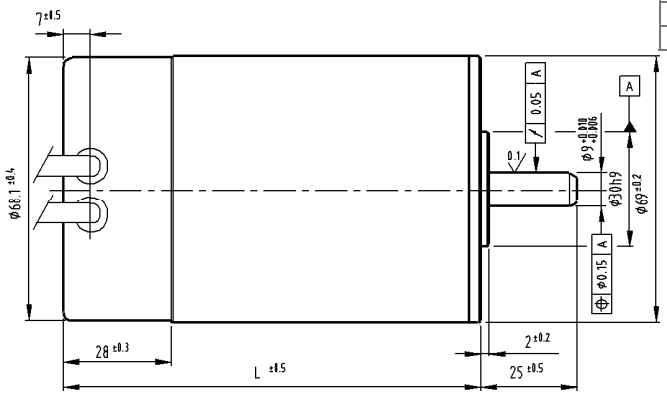

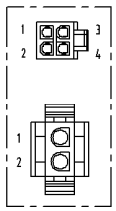

Pin	Lead	Fct
1	Red	+Vs
2	Blk	GND

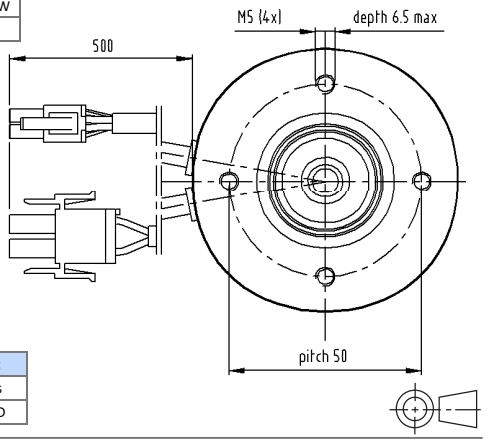

© Allied Motion Technologies Inc.
Issued: Preliminary
Specifications subject to change without notice