TRANSDUCER MOUNT FOR 1″ DIAMETER CANS

MODEL - 8V6-27.100304

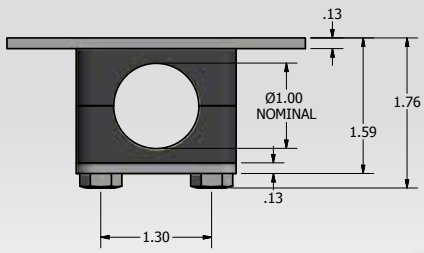

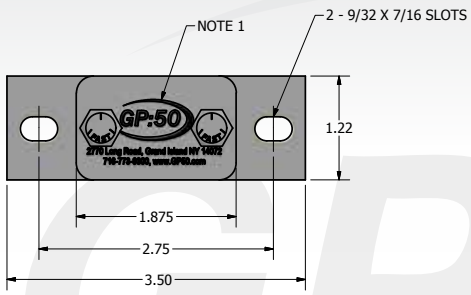

MOUNTING BRACKET DETAILS

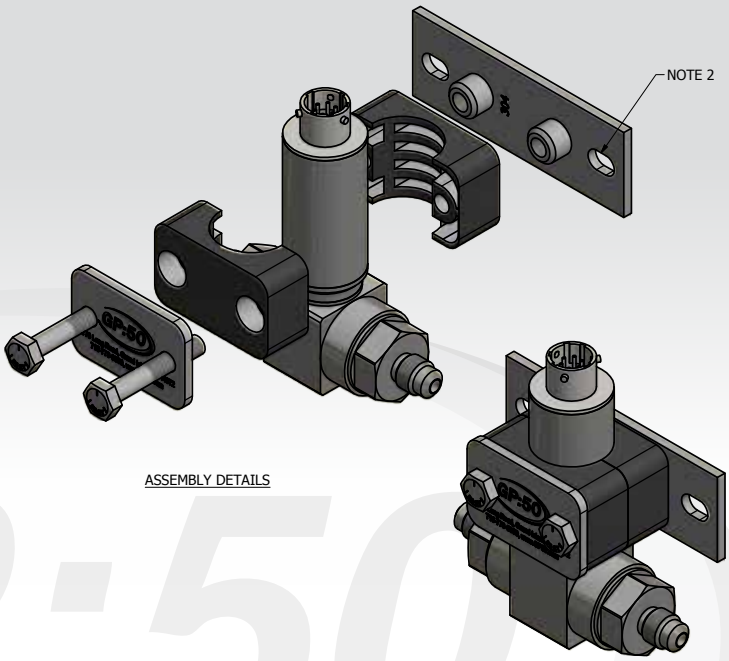

ASSEMBLY DETAILS

NOTES:

1. MARKING INFORMATION TO BE ADDED BY GP:50
2. CUSTOMER TO SUPPLY MOUNTING SCREWS (NOT SHOWN)
3. MATERIAL
   INSERT = POLYPROPYLENE
   METAL = 304 SST

UNLESS OTHERWISE SPECIFIED DIMENSIONS ARE IN INCHES
TOLERANCES: FRACTIONS: ±1/64 DECIMALS: .XX ±.01 .XXX ±.005 ANGLES: ±1/2°
63 MACHINE FINISH (ALL SURFACES) REMOVE BURRS & BREAK SHARP EDGES .015 MAX MACHINE FILLETS TO .015R MAX ALL DIAMETERS TO BE CONCENTRIC WITHIN .010 T.I.R. CHAMFER ALL MALE THREADS 45°±15° TO MINOR DIAMETER C'SINK ALL FEMALE THREADS 90°±10° TO MAJOR DIAMETER

REVISIONS

LET	DATE	BY	ECN
-	7/27/17	GMS	2309

THIRD ANGLE PROJECTION

GP:50 AEROSPACE DIV.
2770 LONG ROAD
GRAND ISLAND, NY 14072
TEL. NO. (716)773-9300 FAX NO. (716)773-5019
CAGE CODE: ON8Y7

TITLE: TRANSDUCER MOUNT FOR 1.00" DIAMETER CANS

SEE ENGINEERING CHANGE NOTICE (ECN) FOR DRAWING APPROVALS

SCALE	MATERIAL	DRAWING NO.
1:1	SEE DWG	8V6-27.100304

© 2017 GP:50 NY Ltd. | 2770 Long Rd, Grand Island, NY 14072 USA

Tel: +1.716.773.9300 **Fax:** +1.716.773.5019 **Email:** sales@gp50.com **Web:** www.gp50.com